NOTES:

1. INTERPRET DRAWING IN ACCORDANCE WITH ANSI Y14.5M-1982.
2. MATERIAL: USE ASTM A36 OR EQUIVALENT WITH 30 KSI YIELD STRENGTH.
3. REMOVE BURRS AND BREAK ALL SHARP EDGES.
4. ALL MACHINED SURFACES 125 UNLESS OTHERWISE NOTED.
5. FINISH: FINISH A36 STEEL WITH A NICKEL PLATE.
6. INK STAMP PART NUMBER ON ANY CONVENIENT FLAT SURFACE.

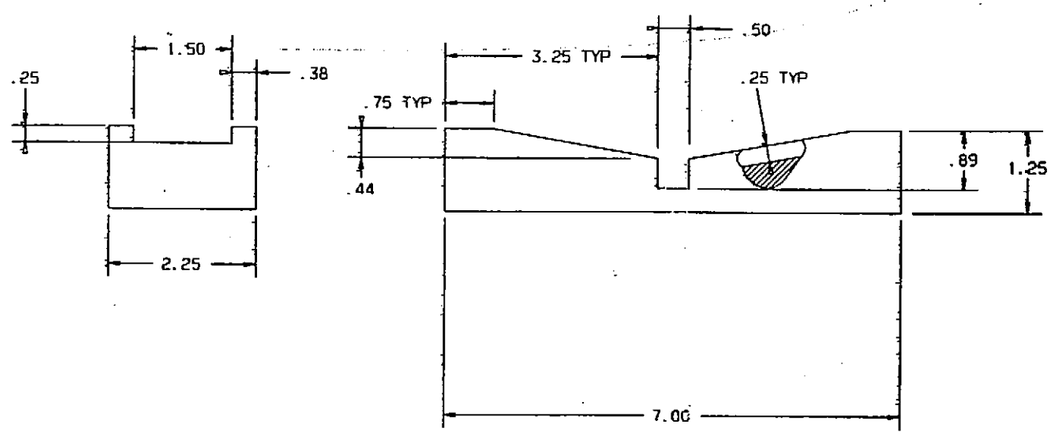

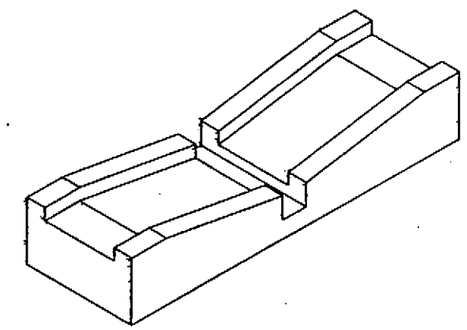

JOB P.T. NUMBER_____

APPVL. SIGNATURES	DATE
DRAWN BY	
CHECKER	
STRESS	
WEIGHTS	
THERMO ENGR	
MATL	
CAST/FORG	
CMPNT	
OPTIC	
HUMAN FAC	
SAFETY	
DYN/PROD SUPPT	
GR ENGR	
PROJ ENGR	
MFG ENGR	
QUAL ENGR	
PROGRAM APPROVAL	

DWG. CERTIFICATION

	DATE
ENGR	
CHKR	
CUSTOMER APPROVAL	

C.O.C. USE ONLY

	DATE	INIT
REC'D.		
FILE		
DELETE		
VERIFY		

© ASTM International

100 Barr Harbor Drive, PO Box C700
West Conshohocken, PA 19428-2959
ASTM Designation: **D 3410**
ASTM Stock Number: **ADJD3410-E-PDF**
2021

ASTM INTERNATIONAL

PARTS LIST

SEE ENGINEERING RECORDS

MATERIAL: SEE NOTES

MARTIN MARIETTA CORPORATION
POST OFFICE BOX 5837, ORLANDO, FLORIDA 32855

DRAWN BY: W. WALDROP

ALIGNMENT FIXTURE

SIZE D | FSCM NO 04939 | DWG NO 79966741

SCALE 1/1 | SHEET 1 OF 1

DWG NO	SH
79966740	1

REVISIONS				
ZONE	REV	DESCRIPTION	DATE	APPROVED

NOTES:

1. INTERPRET DRAWING IN ACCORDANCE WITH ANSI Y14.5M-1982.

2. MATERIAL: EXCEPT FOR PARTS 79966740-006 AND 79966740-007 USE ASTM A36 OR EQUIVALENT WITH 30 KSI YIELD STRENGTH. FOR USE IN NON AMBIENT ENVIRONMENTS A SUITABLE CORRISION RESISTANT ALLOY, SUCH AS 303 FREE-MACHINING STAINLESS STEEL, OR FOR AGGRESSIVE ENVIRONMENTS, 316 STAINLESS STEEL OR INCONEL 600, MAY BE SUBSTITUTED.

3. REMOVE BURRS AND BREAK ALL SHARP EDGES.

4. ALL MACHINED SURFACES 125 UNLESS OTHERWISE NOTED.

5. FINISH: FOR DETAIL PARTS 79966740-001 THRU -005 AND, -011 THRU -016; FINISH A36 STEEL WITH A NICKEL PLATE.

6. SURFACES INDICATED ON DETAIL PARTS SHALL BE FINISHED AS FOLLOWS: PLASMA SPRAY WITH EVEN, .020-.025 THICK, COATING OF METCO P130-10, 87% ALUMINA, 13% TITANUM DIOXIDE, OR EQUIVALENT.
   SUGGESTED SOURCE: METCO INCORP.
   1101 PROSPECT AVENUE
   WESTBURY, NY
   11590-2724
   (516) 334-1300

7. SURFACES INDICATED ON DETAIL PARTS TO BE 8

8. PRESS FIT PINS, FIND NUMBERS 10, 11 AND 13 INTO MATING PARTS USING WET, UNTHINNED ZINC CHROMATE PRIMER, COMP. G, COLOR Y.

9. PRESS FIT BUSHINGS, FIND NUMBER 12 INTO MATING PART USING WET, UNTHINNED ZINC CHROMATE PRIMER, COMP. G, COLOR Y.

10. MATERIAL: FOR DETAIL PARTS 79966740-006 AND -007: CARBON OR ALLOY STEEL IN ACCORDANCE WITH FED. STD. NO.66, EXCEPT THAT THE MAXIMUM SULFUR AND PHOSPHORUS CONTENT SHALL BE 0.05 AND 0.04 PERCENT RESPECTIVELY.

11. FINISH: FOR DETAIL PARTS 79966740-006 AND -007: THE PINS SHALL HAVE A CORE HARDNESS OF C47-58 AND A CASE HARDNESS OF C60 MINIMUM. THE MINIMUM CASE DEPTH SHALL BE 0.015. THE CORE HARDNESS SHALL NOT AT ANY TIME EXCEED THE CASE HARDNESS.

12. SUGGESTED SOURCE IS: PART NO. C420
    METALLIZED CARBON CO., INC.
    16 SOUTH WATER STREET
    OSSING, NEW YORK 10562
    OR EQUIVALENT.

13. THREE MATCHED SETS OF TWO GRIPPERS ARE PROVIDED:
    A. ASSEMBLY -009 USING GRIPPERS -004 AND -039, ALLOWING FOR TEST OF SPECIMEN FROM 0.060 TO 0.270 INCH THICK.
    B. ASSEMBLY -109 USING GRIPPERS -011 AND -049, ALLOWING FOR TEST OF SPECIMEN FROM 0.160 TO 0.370 INCH THICK.
    C. ASSEMBLY -209 USES GRIPPERS -013 AND -014, WHICH ARE EXTERNALLY ASSEMBLED AROUND THE TEST SPECIMEN AND ALLIGNED USING PART NUMBER 79966741.

14. INK STAMP PART NUMBER ON ANY CONVENIENT FLAT SURFACE.

15. FEATURE F DIMENSION AS REQUIRED FOR TEST SPECIMEN THICKNESS.

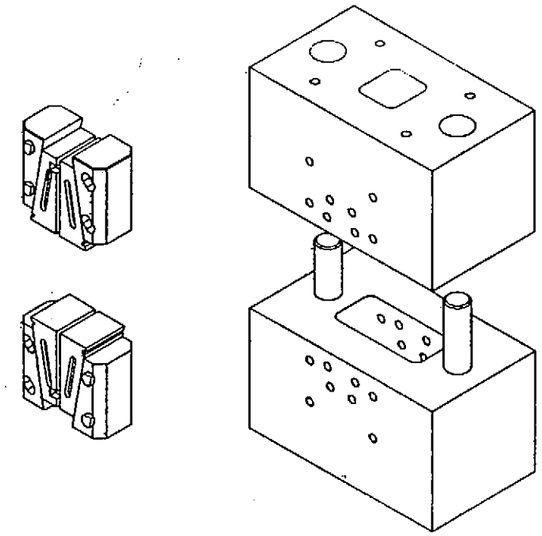

QUANTITY/DASH NO.							FIND NO	PSCH NO.	CS	PART OR IDENTIFYING NO.	PL	SPECIFICATION OR DOCUMENT NO	NOMENCLATURE OR DESCRIPTION	SYM	NOTE	END ITEM	EFFECTIVITY FROM	EFFECTIVITY THRU
				4			23			NAS1351-4-12			SCREW					
				2			22			79966740-016			ALIGNMENT PIN					
				2			21			79966740-015			KEY					
				2			20			79966740-014			GRIPPER					
				2			19			79966740-013			GRIPPER					
1							18			79966740-012			GRIPPER					
							17			79966740-011			GRIPPER					
AR	AR	AR	AR				16			COMP G, COLOR Y			PRIMER					
					16	16	15			MS51977-54			SCREW, SET, HALF-DOG POINT					
				16	16	16	14			MS51973-56			SCREW, SET, CONE POINT					
2	2						13			MS16555-46			PIN, STRAIGHT					
		2					12						BUSHING		12			
			1				11			79966740-007			PIN, STRAIGHT					
			1				10			79966740-006			PIN, STRAIGHT					
	1						9			79966740-005			GRIPPER					
							8			79966740-004			GRIPPER					
				4	4	4	7			79966740-003			WEDGE					
		1					6			79966740-002			TOP					
			1				5			79966740-001			BASE					
					2		4			79966740-049			GRIPPER ASSEMBLY					
						2	3			79966740-039			GRIPPER ASSEMBLY					
				1	1	1	2			79966740-029			TOP ASSEMBLY					
				1	1	1	1			79966740-019			BASE ASSEMBLY					
049	039	029	019	209	109	009				79966740			COMPRESSION TEST FIXTURE					

PARTS LIST

CALC WT	DASH NO	NEXT ASSY	USED ON	NEXT ASSY	FINAL ASSY	TEST
		SEE ENGINEERING RECORDS				
		APPLICATION		QTY REQD		

UNLESS OTHERWISE SPECIFIED, DIMENSIONS ARE IN INCHES AND ARE AFTER PLATING

TOLERANCES ON

FRACTIONS	DECIMALS			ANGLES
±	±	± .03	± .010	±0° 30'

MATERIAL

CONTRACT NO

DRAWN BY W. WALDROP

CHECKED

OR ENGR

PROGRAM APPROVAL

CUSTOMER APPROVAL

THIRD ANGLE PROJECTION

MARTIN MARIETTA CORPORATION

POST OFFICE BOX 5837, ORLANDO, FLORIDA 32855

COMPRESSION TEST FIXTURE

SIZE	PSCH NO	DWG NO
D	04939	79966740

SCALE 1/1

SHEET 1 OF 6

© ASTM International
100 Barr Harbor Drive, PO Box C700
West Conshohocken, PA 19428-2959
ASTM Designation: D 3410
ASTM Stock Number: ADJD3410-E-PDF
2021

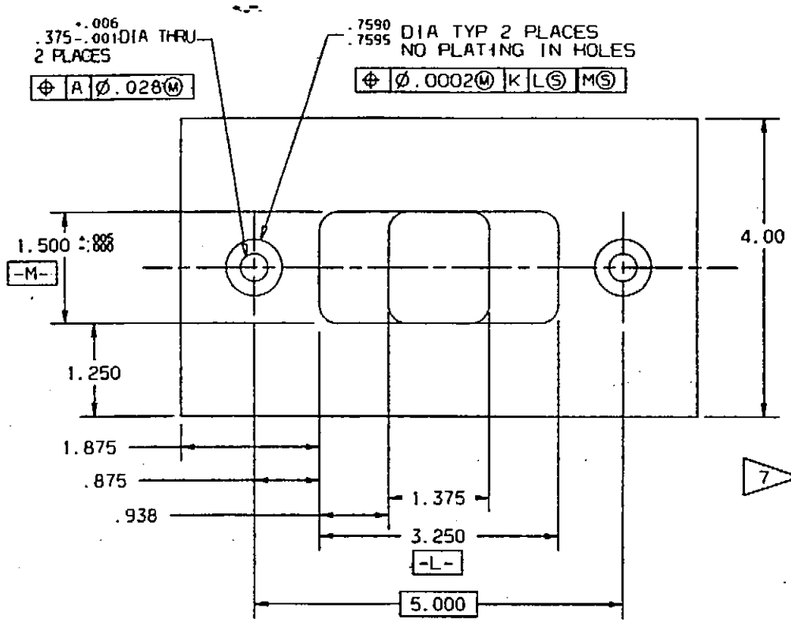

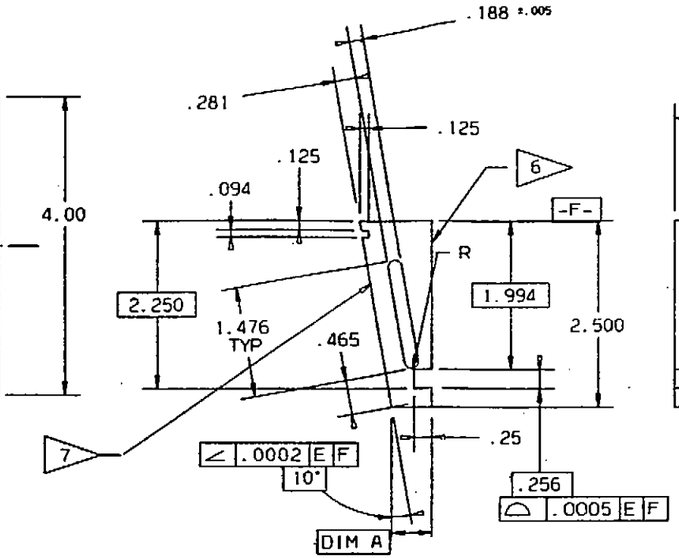

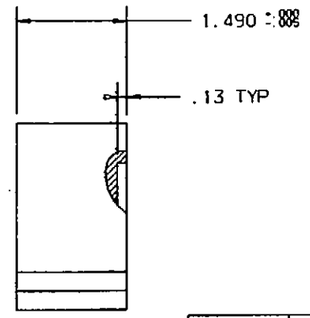

PART NO	DIM A
-004	.559
-011	.509

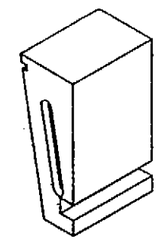

GRIPPER

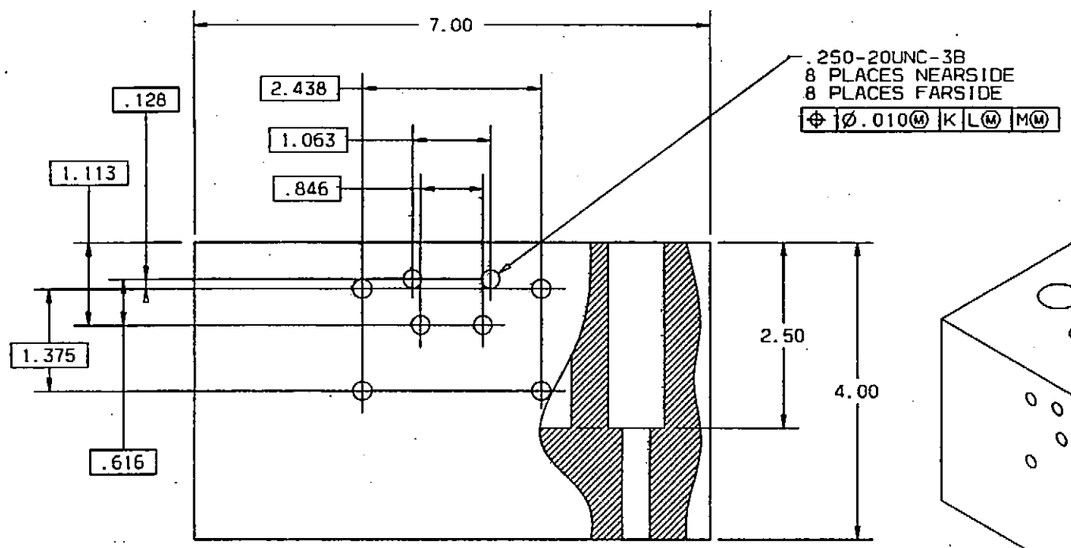

-001 BASE

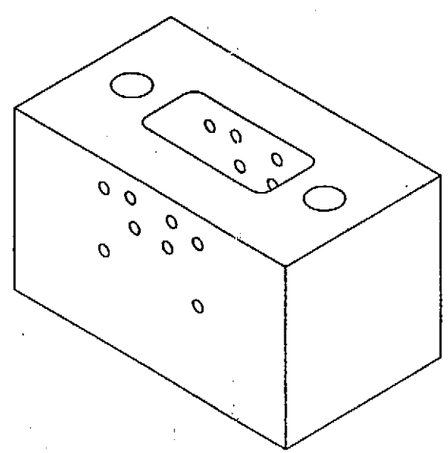

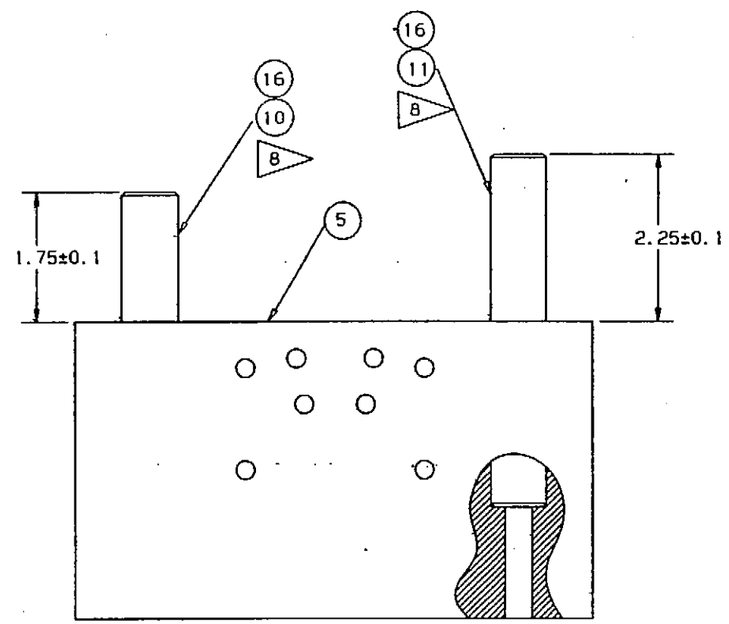

-019 BASE ASSEMBLY

© ASTM International
100 Barr Harbor Drive, PO Box C700
West Conshohocken, PA 19428-2959
ASTM Designation: **D 3410**
ASTM Stock Number: **ADJD3410-E-PDF**
2021

DRAWN BY W. WALDROP	SIZE D	FSCM NO. 04939	DWG. NO. 79966740
CUSTOMER APPROVAL	SCALE 1/1		SHEET 2/6